TOTO

"CURIO" ACCESSORIES

SPECIFICATIONS

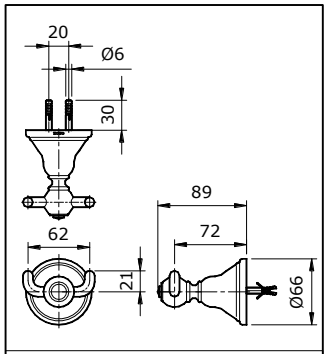

TX 704 ACW
" CURIO" Double Robe Hook

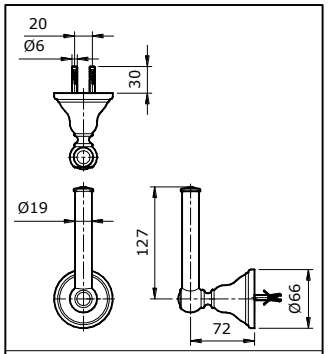

TX 722 AC
"CURIO" Spare Paper Holder

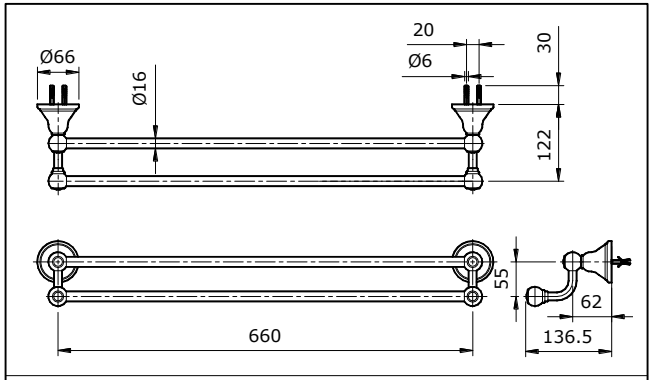

TX724 AC
"CURIO" Double Towel Bar (L=660 mm)

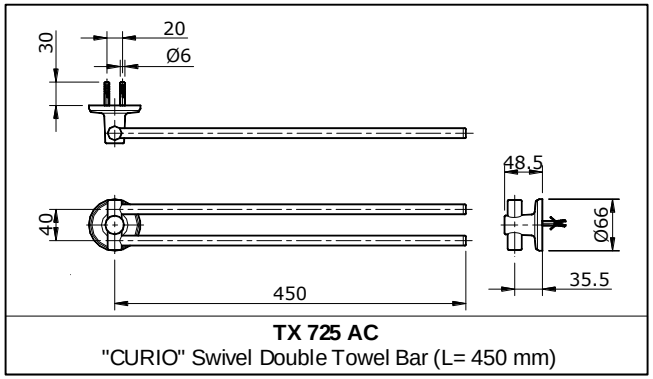

TX 725 AC
"CURIO" Swivel Double Towel Bar (L= 450 mm)

MAINTENANCE

Always wipe chrome plated area with dry soft cloth, and sometimes wipe it with cloth soaked in mild soap.

ATTENTION

1. Don't use abrasive cleaning material such as; detergents containing hydrochloric acids, thinner, polishing powder, and nylon brush.
2. As the product model is constantly updated, the actual product may not look the same as it shown in the diagram, but the basic installation principles are the same.

INSTALLATION

1

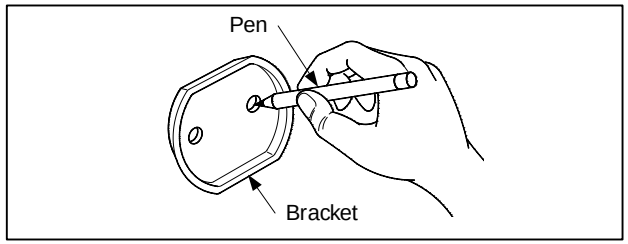

2

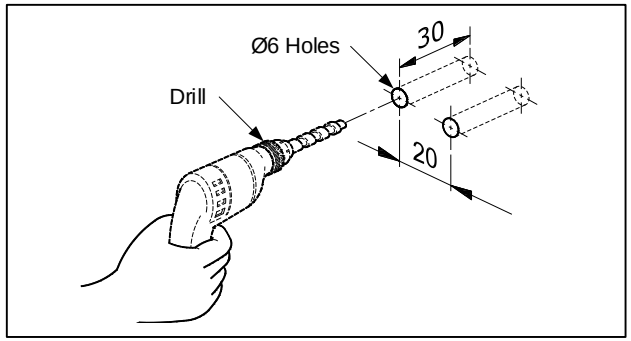

3

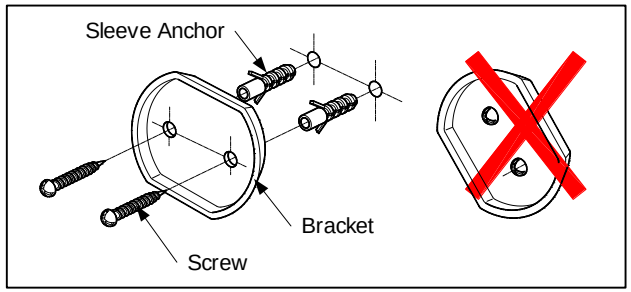

4

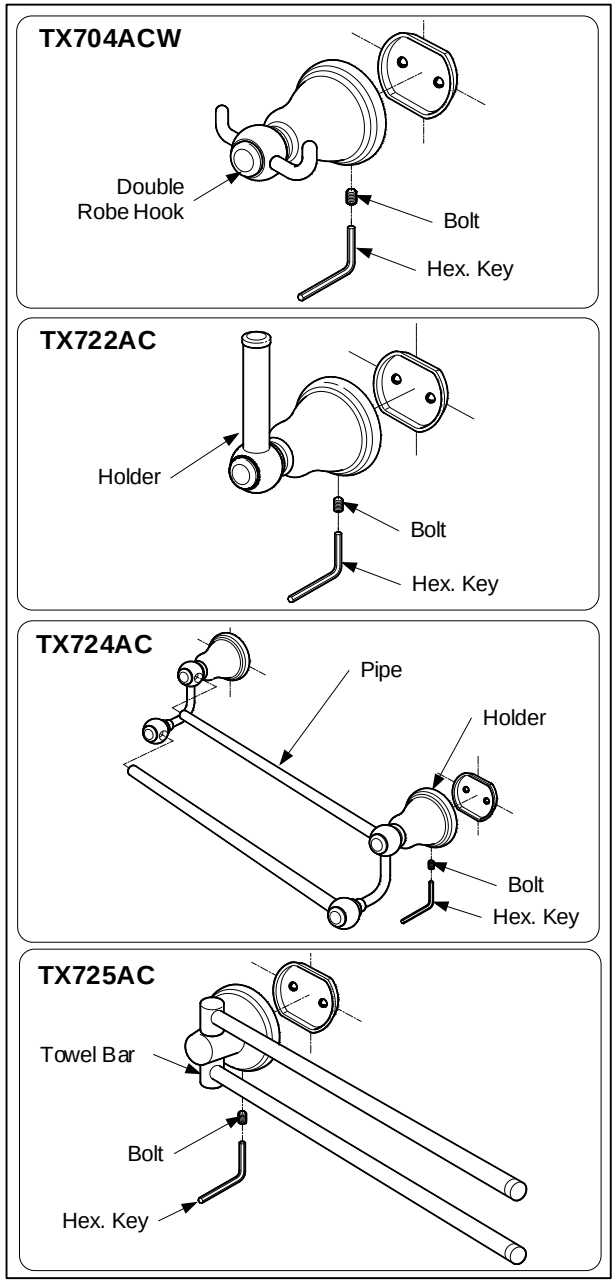

TOTO

"CURIO" ACCESSORIES

SPESIFIKASI

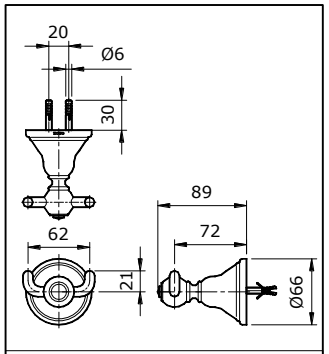

TX 704 ACW
" CURIO" Double Robe Hook

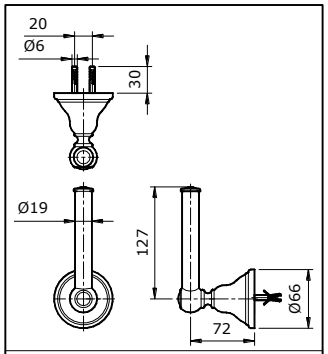

TX 722 AC
"CURIO" Spare Paper Holder

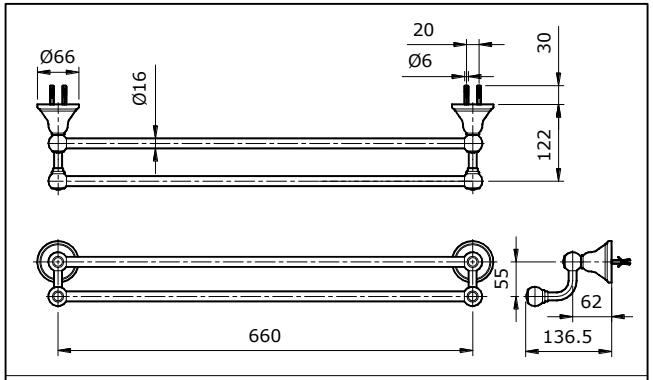

TX724 AC
"CURIO" Double Towel Bar (L=660 mm)

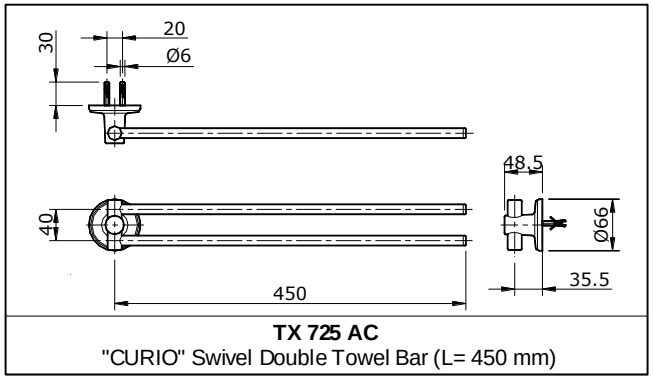

TX 725 AC
"CURIO" Swivel Double Towel Bar (L= 450 mm)

PEMELIHARAAN

Selalu bersihkan area yang berlapis dengan kain lembut kering, dan sesekali bersihkan dengan kain yang direndam dalam sabun yang dicampur air.

PERHATIAN

1. Jangan gunakan bahan pembersih yang bersifat abrasif seperti deterjen yang mengandung asam klorida, tinner, bubuk polishing dan sikat nilon.
2. Karena model produk terus mengalami pembaharuan, aktual produk mungkin tidak sama dengan gambar, tapi prinsip dasar pemasangan adalah sama.

PEMASANGAN

1

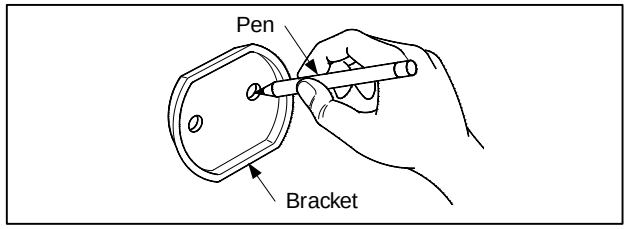

2

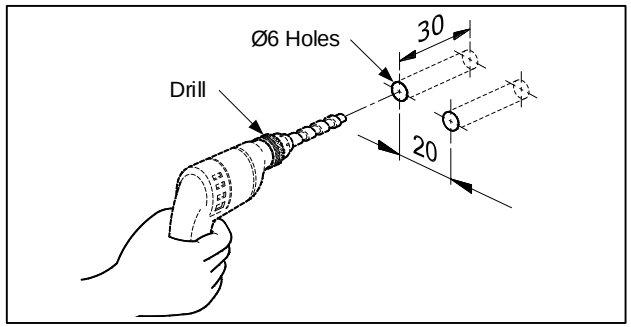

3

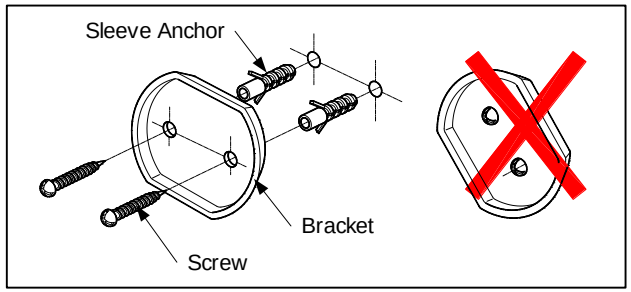
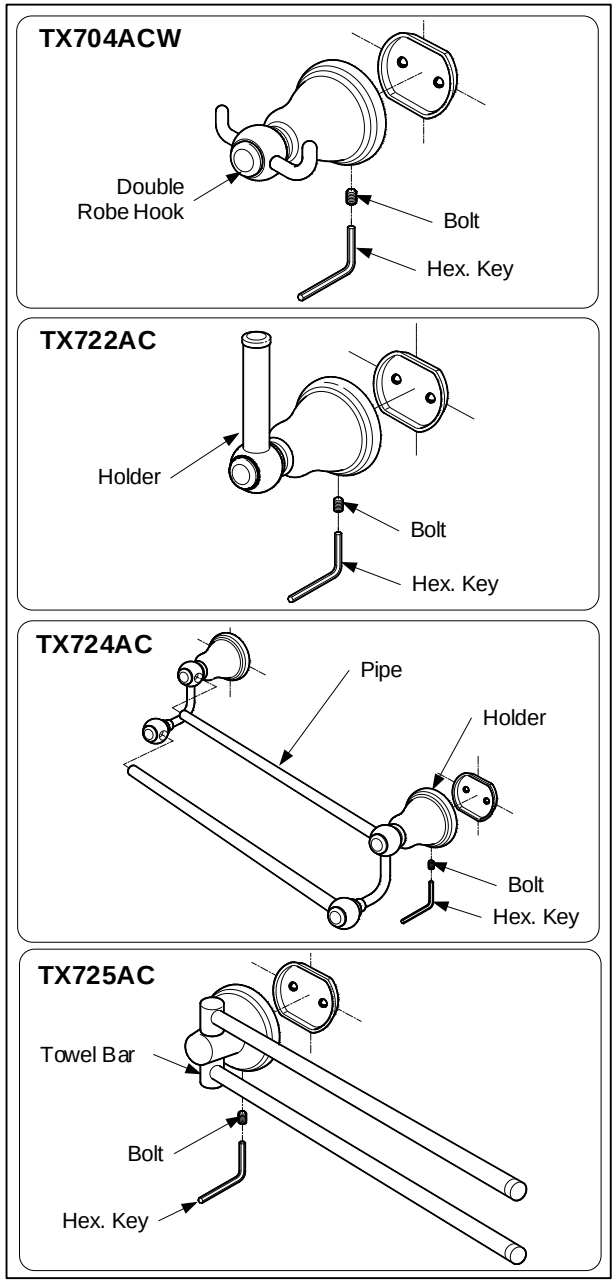
4