TOTO

FLOOR DRAIN W/ SQUARE FLANGE (115 x 115 mm) x 2" TX1EB

SPECIFICATIONS

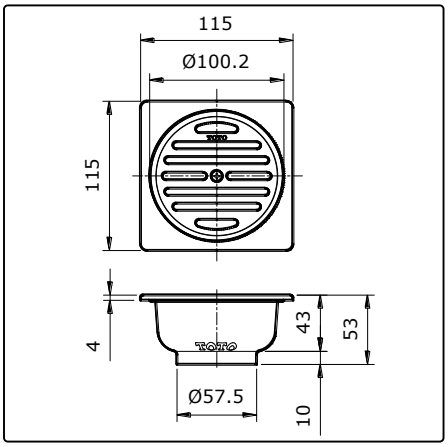

MAINTENANCE

Always wipe chrome plated area with dry soft cloth, and sometimes wipe it with cloth soaked in mild soap.

ATTENTION

1. Don't use abrasive cleaning material such as; detergents containing hydrochloric acids, thinner, polishing powder, and nylon brush.
2. As the product model is constantly updated, the actual product may not look the same as it shown in the diagram, but the basic installation principles are the same.

INSTALLATION

1.

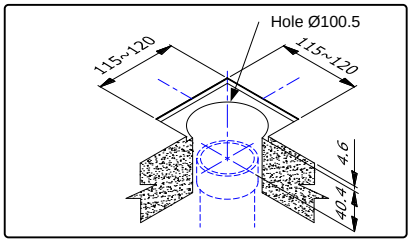

2.

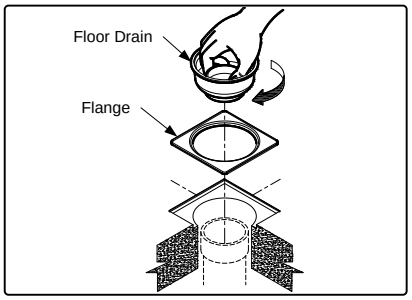

3.

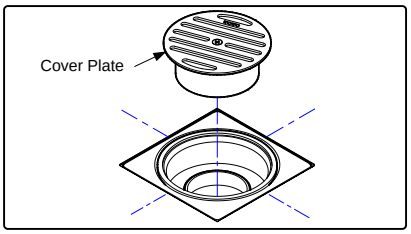

TROUBLESHOOTING

PROBLEM	CHECK POINT	SOLUTION
Water can not running	1	Clean

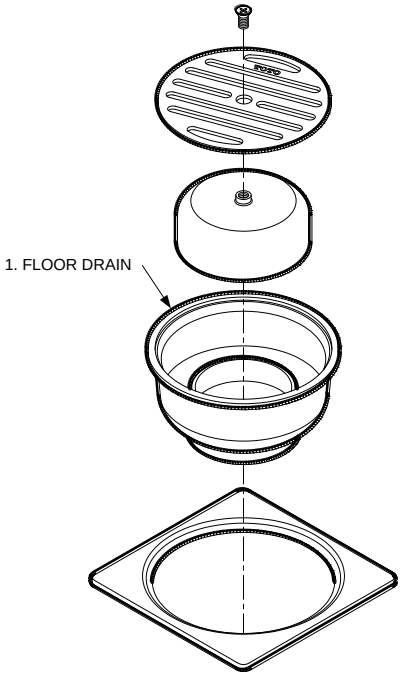

S060393R R2

TOTO

FLOOR DRAIN W/ SQUARE FLANGE (115 x 115 mm) x 2" TX1EB

SPECIFICATIONS

MAINTENANCE

Always wipe chrome plated area with dry soft cloth, and sometimes wipe it with cloth soaked in mild soap.

ATTENTION

1. Don't use abrasive cleaning material such as; detergents containing hydrochloric acids, thinner, polishing powder, and nylon brush.
2. As the product model is constantly updated, the actual product may not look the same as it shown in the diagram, but the basic installation principles are the same.

INSTALLATION

TROUBLESHOOTING

S060393R R2

TOTO

FLOOR DRAIN W/ SQUARE FLANGE (115 x 115 mm) x 2" TX1EB

SPESIFIKASI

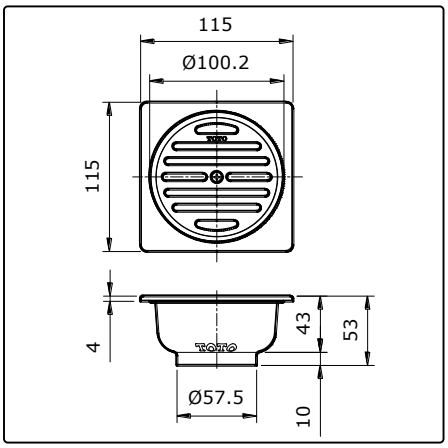

PEMELIHARAAN

Selalu bersihkan area yang berlapis krom dengan kain lembut kering, dan sesekali bersihkan dengan kain yang direndam dalam sabun yang dicampur air.

PERHATIAN

1. Jangan gunakan bahan pembersih yang bersifat abrasif seperti deterjen yang mengandung asam klorida, tinner, bubuk polishing dan sikat nilon.
2. Karena model produk terus mengalami pembaharuan, aktual produk mungkin tidak sama dengan gambar, tapi prinsip dasar pemasangan adalah sama.

PEMASANGAN

1.

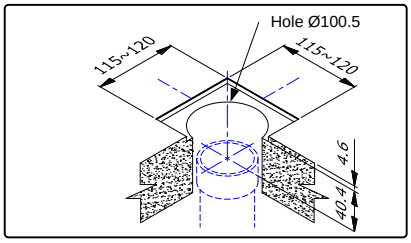

2.

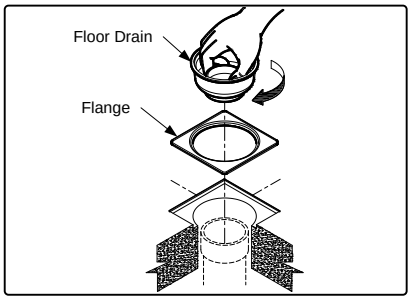

3.

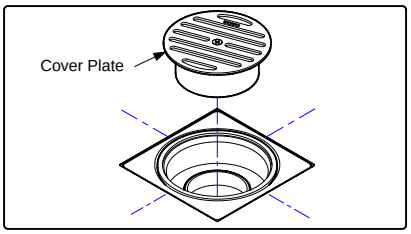

PENYELESAIAN MASALAH

MASALAH	POIN PERIKSA	SOLUSI
Air tidak bisa mengalir	1	Bersihkan

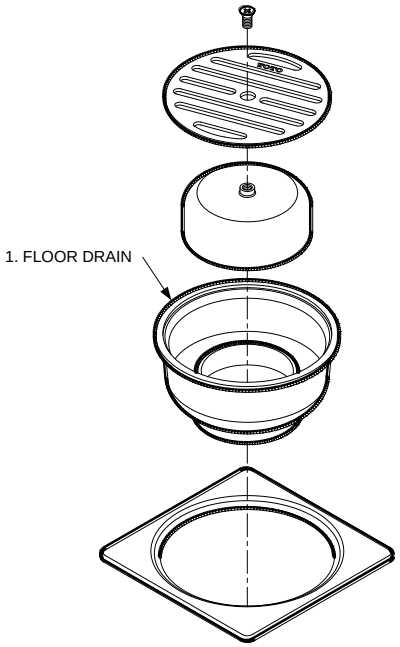

S060393R R2

TOTO

FLOOR DRAIN W/ SQUARE FLANGE (115 x 115 mm) x 2" TX1EB

SPESIFIKASI

PEMELIHARAAN

PERHATIAN

PEMASANGAN

PENYELESAIAN MASALAH

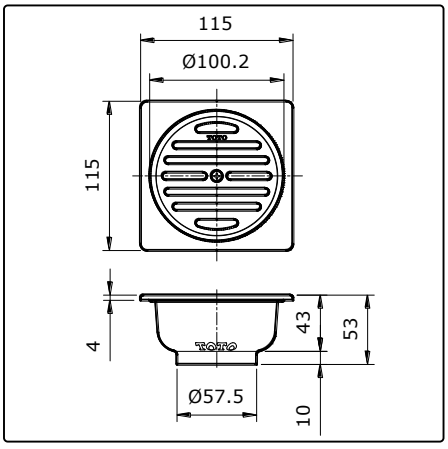

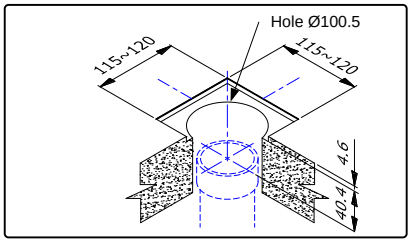

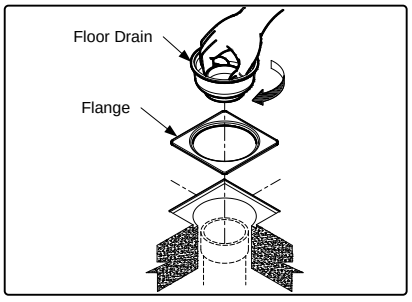

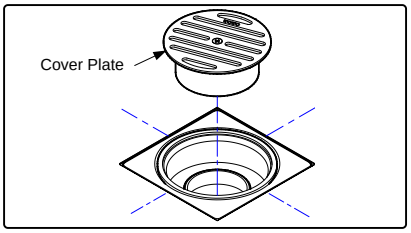

MASALAH	POIN PERIKSA	SOLUSI
Air tidak bisa mengalir	1	Bersihkan

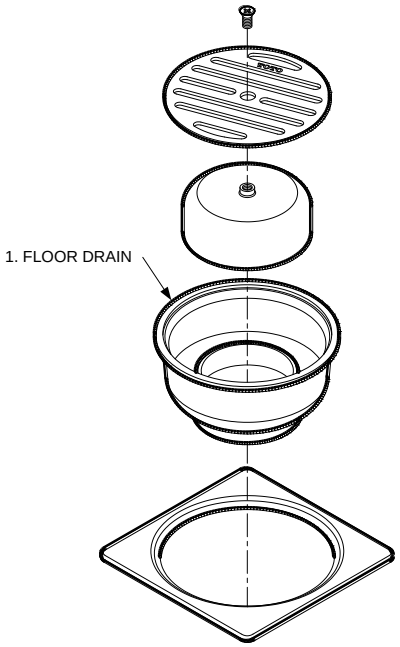

S060393R R2